Step 1

Locate The bottom filter unit where you want the unit to set. Using a forklift, set the power/motor unit on top of the filter unit (Large phillips screwdriver or line up punches works good toalign the two units up together)
NEVER tighten a bolt until all bolts are in place, in the event the unit needs to be adjusted. These units have been preassembled at the factory.

After top has been set, Remove the fork lift pockets

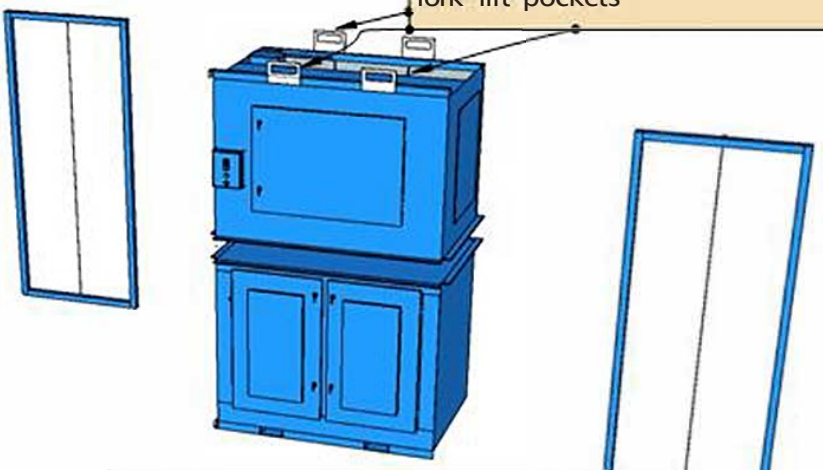

Frame on inside with sheet metal on the outside
Look for # 1 on bottom riqht corner

Step 2

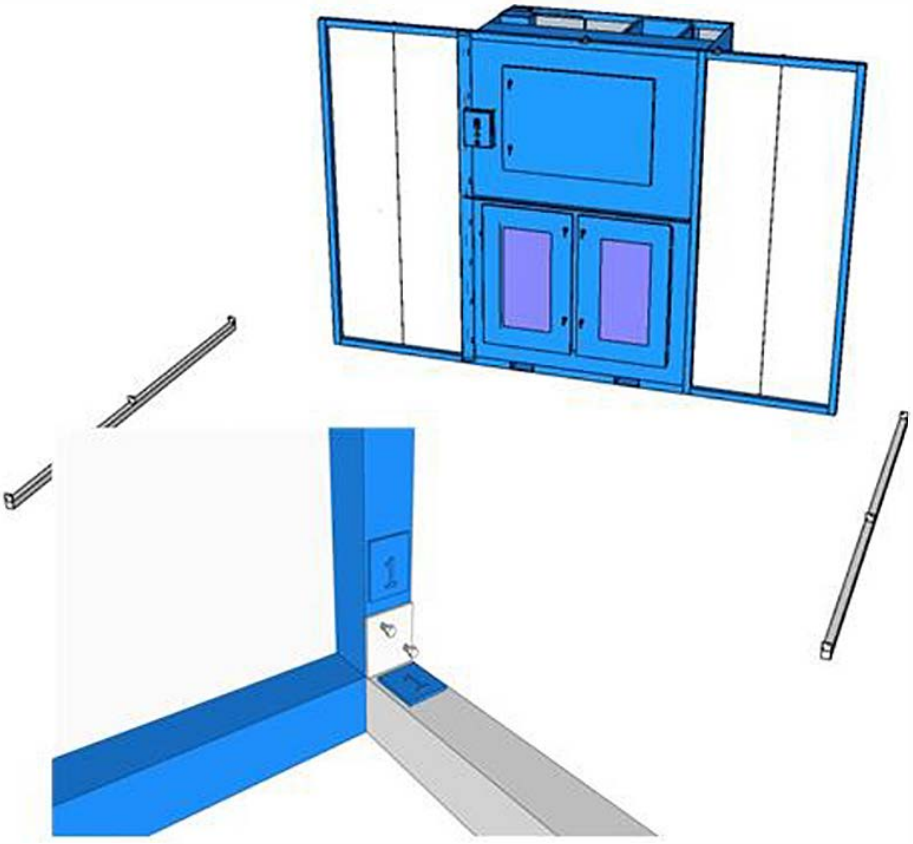

Step 3

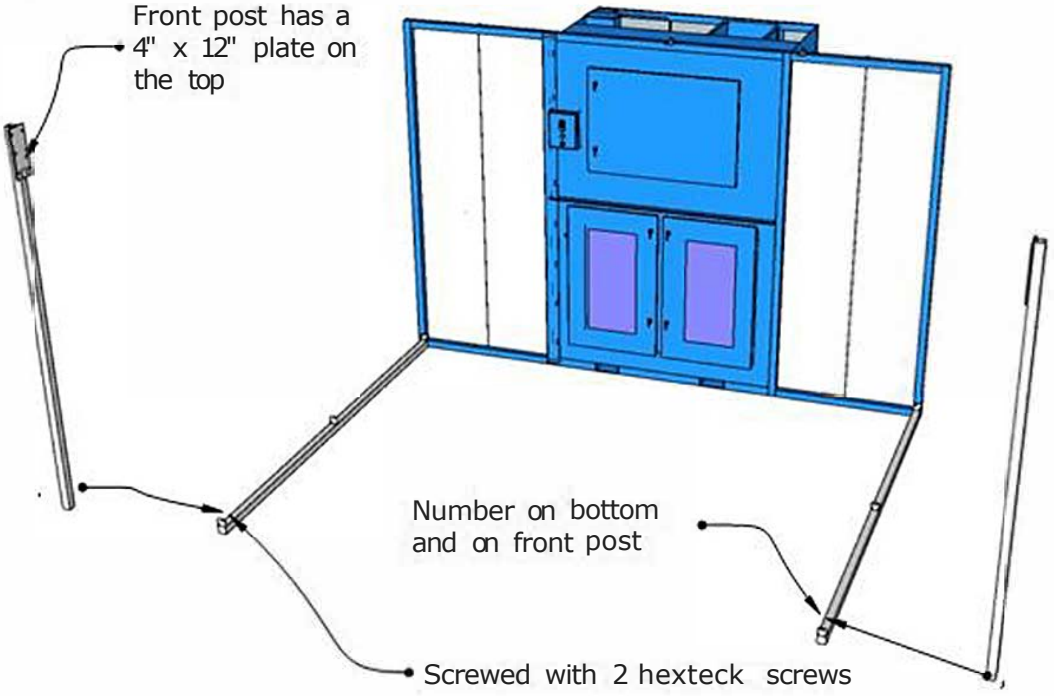
Front post has a 4" x 12" plate on the top
Number on bottom and on front post
Screwed with 2 hexteck screws

Step 4

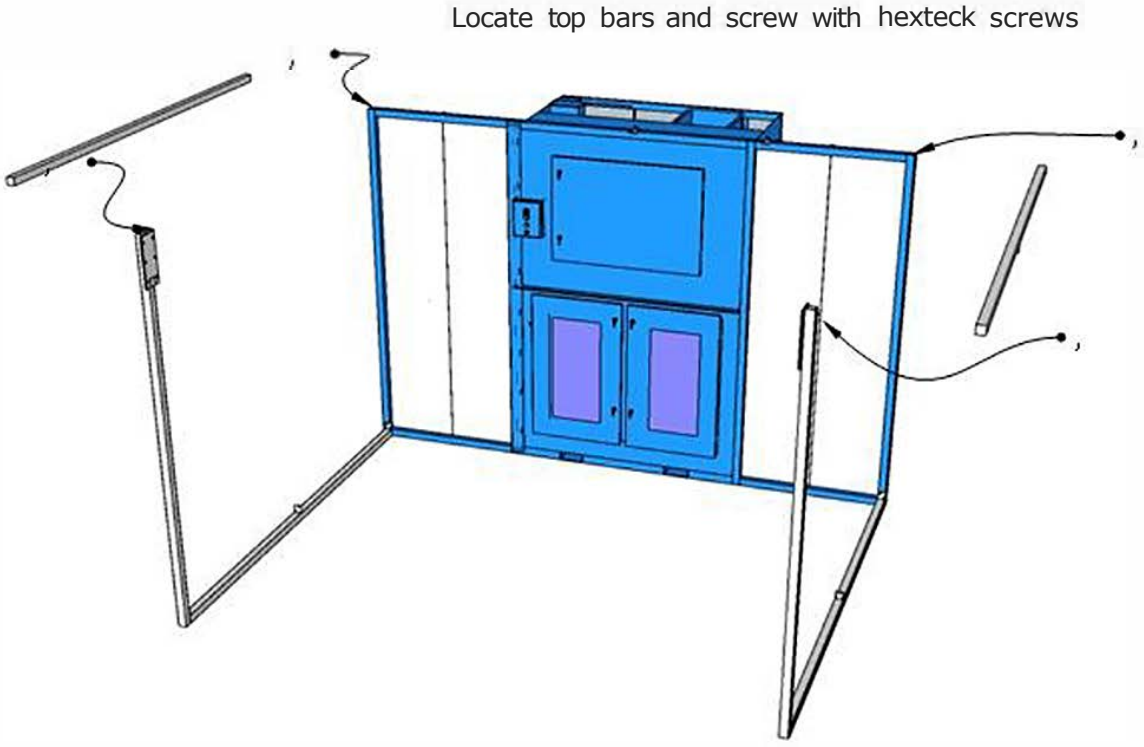
Locate top bars and screw with hexteck screws

Step 5

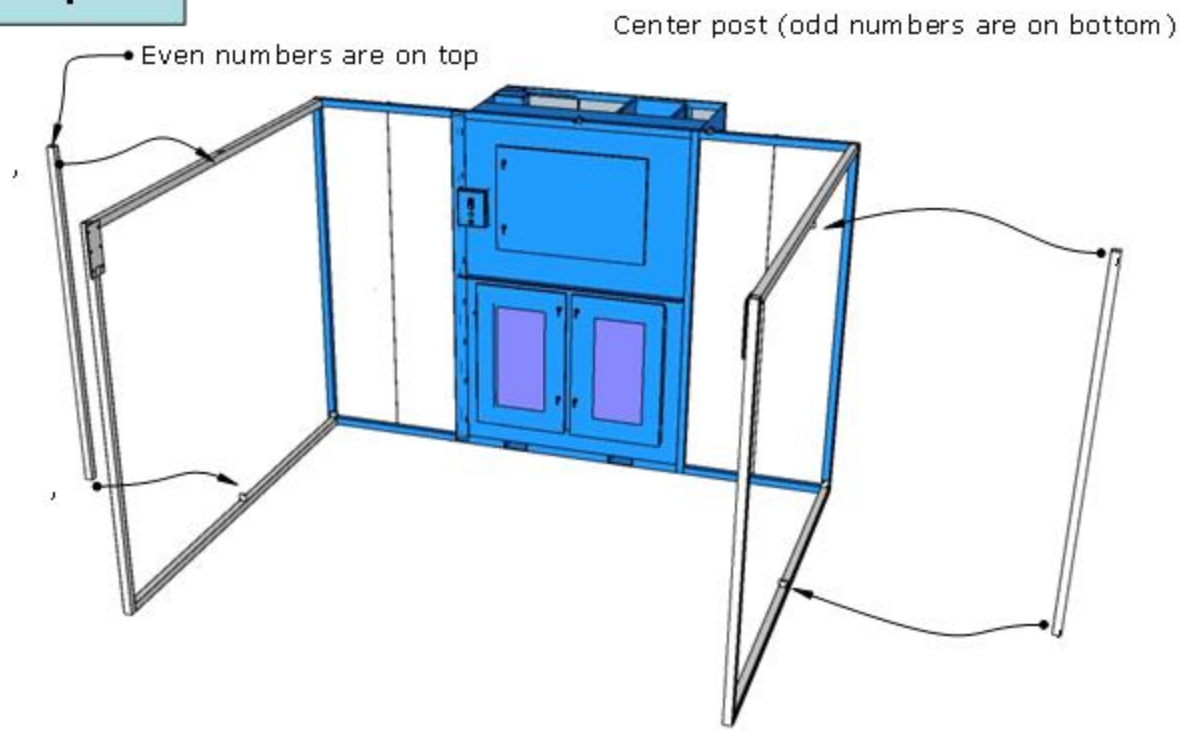

Step 6

Front headers Bolt together on the floor, and lift up with forklift

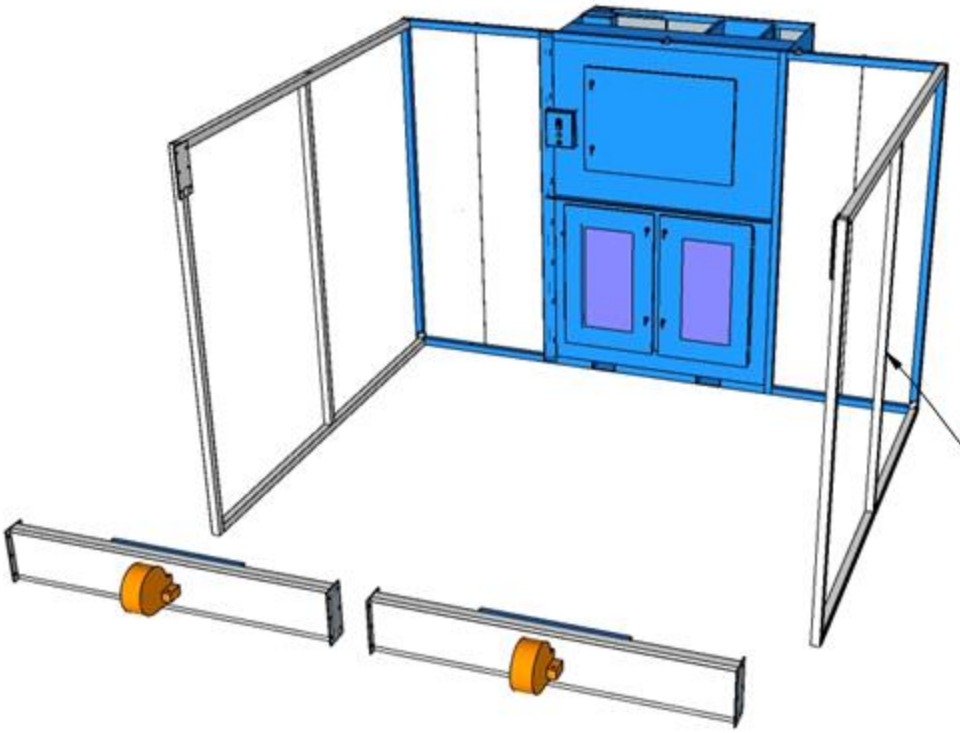

Step 7

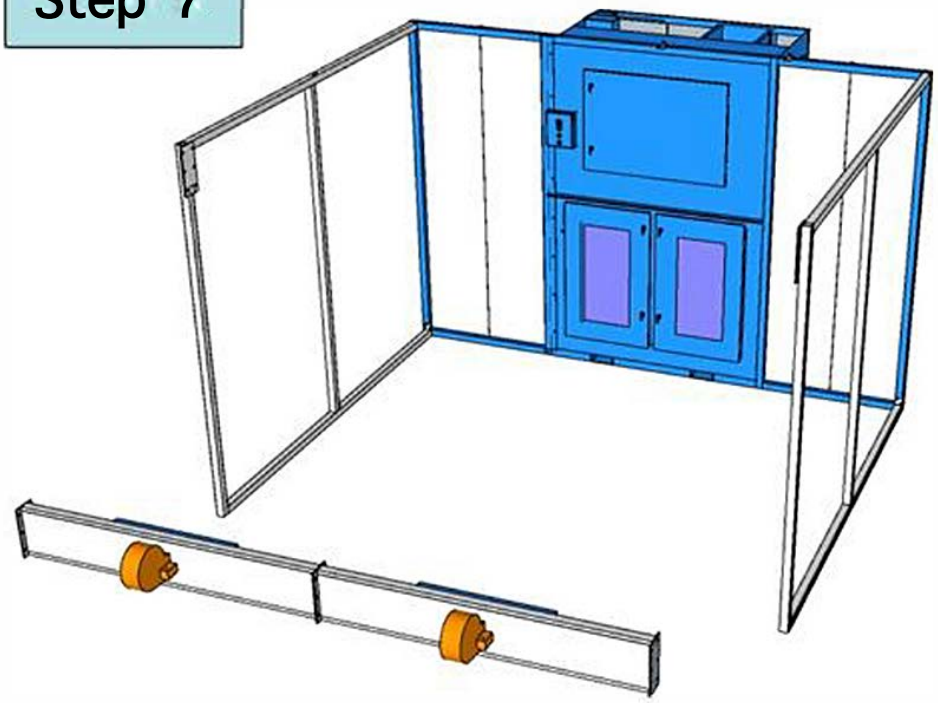

Placing the Headers with positive air fans in place

Step 8

Bolt the headers together then bolt to the post, Top bolt on the inside can not be used, because it will hit the tube.

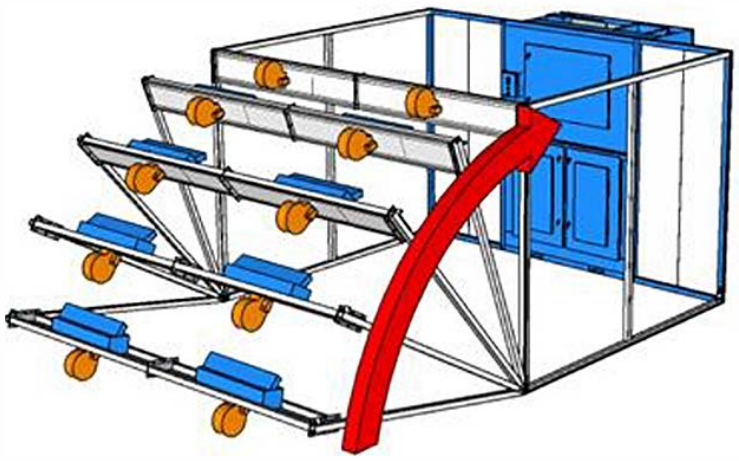

Step 9

Locate the bars that fit overhead, looking for EVEN numbers at the ends of the bars.

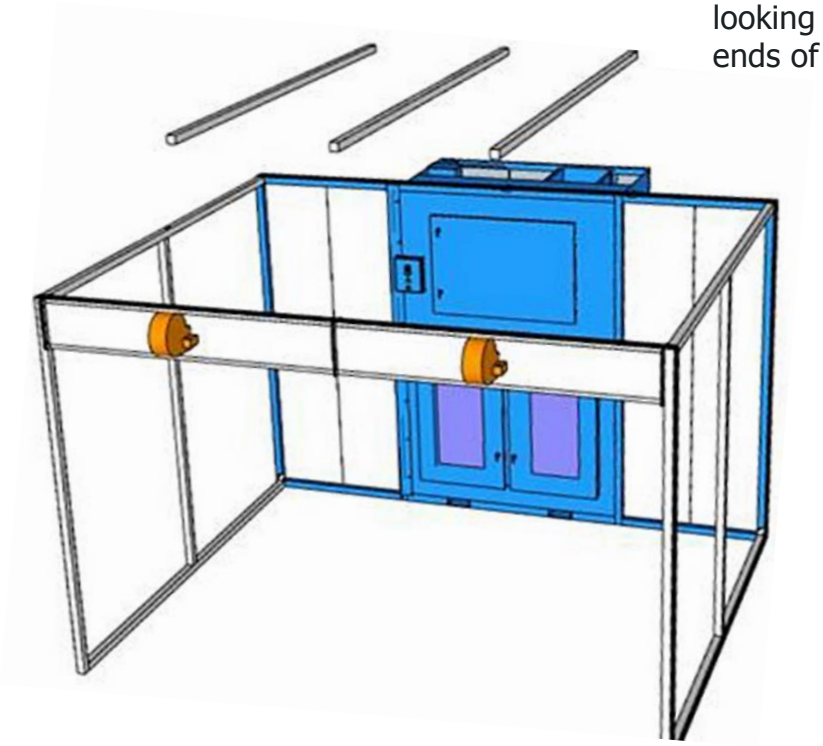

Step 10

After the bars have been located, place on top of the front and back, and screw into permanent location.

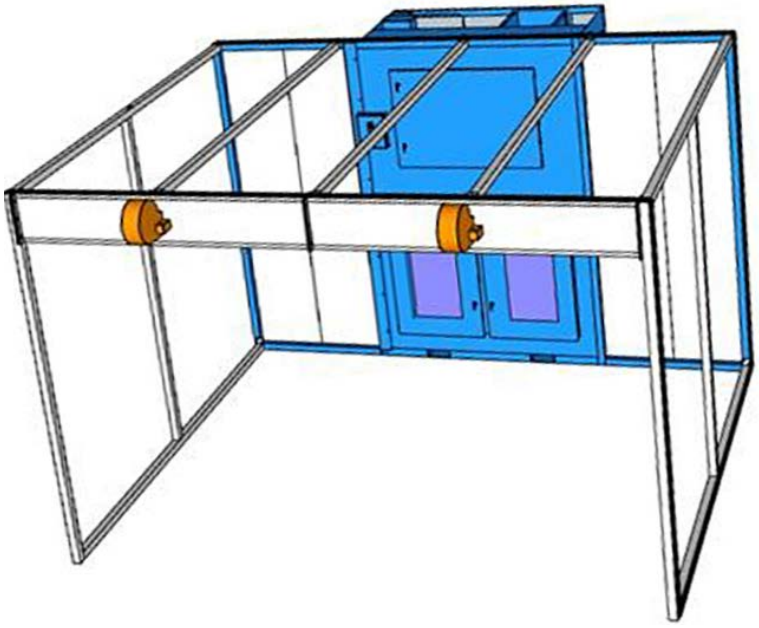

Add on Instructions for Machines With Metal Tops

When installing the frame DO NOT Tighten any of the Screws or bolts in the frame, UNTIL the roof panels are on.

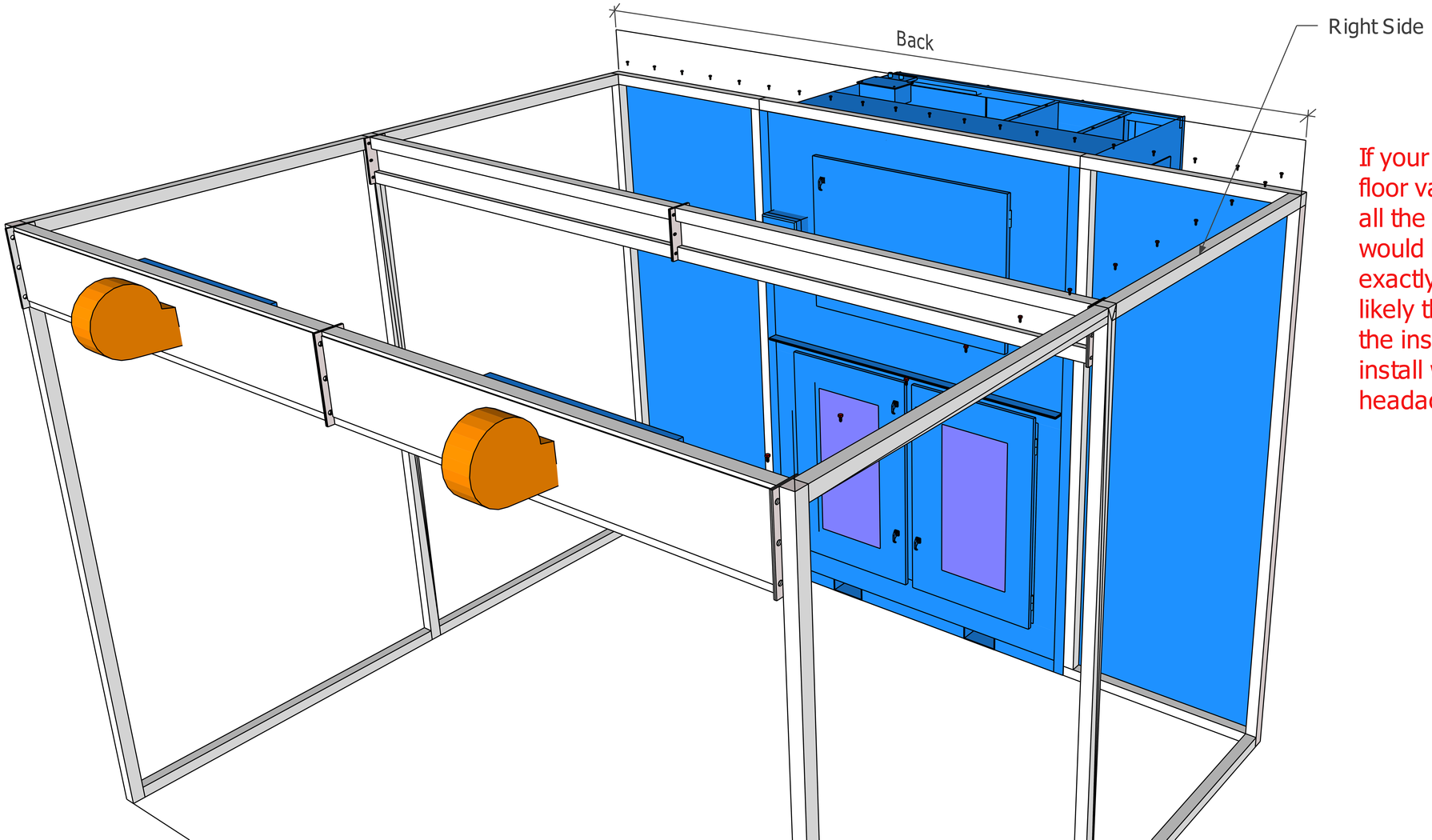

If your floor and the manufactures floor varied in level and they screwd all the top metal down, the installers would have to shim this frame to be exactly the same as theirs. Now most likely the floors will be different and the installers making new holes as they install will prevent a lot of installation headaches.

Step 11

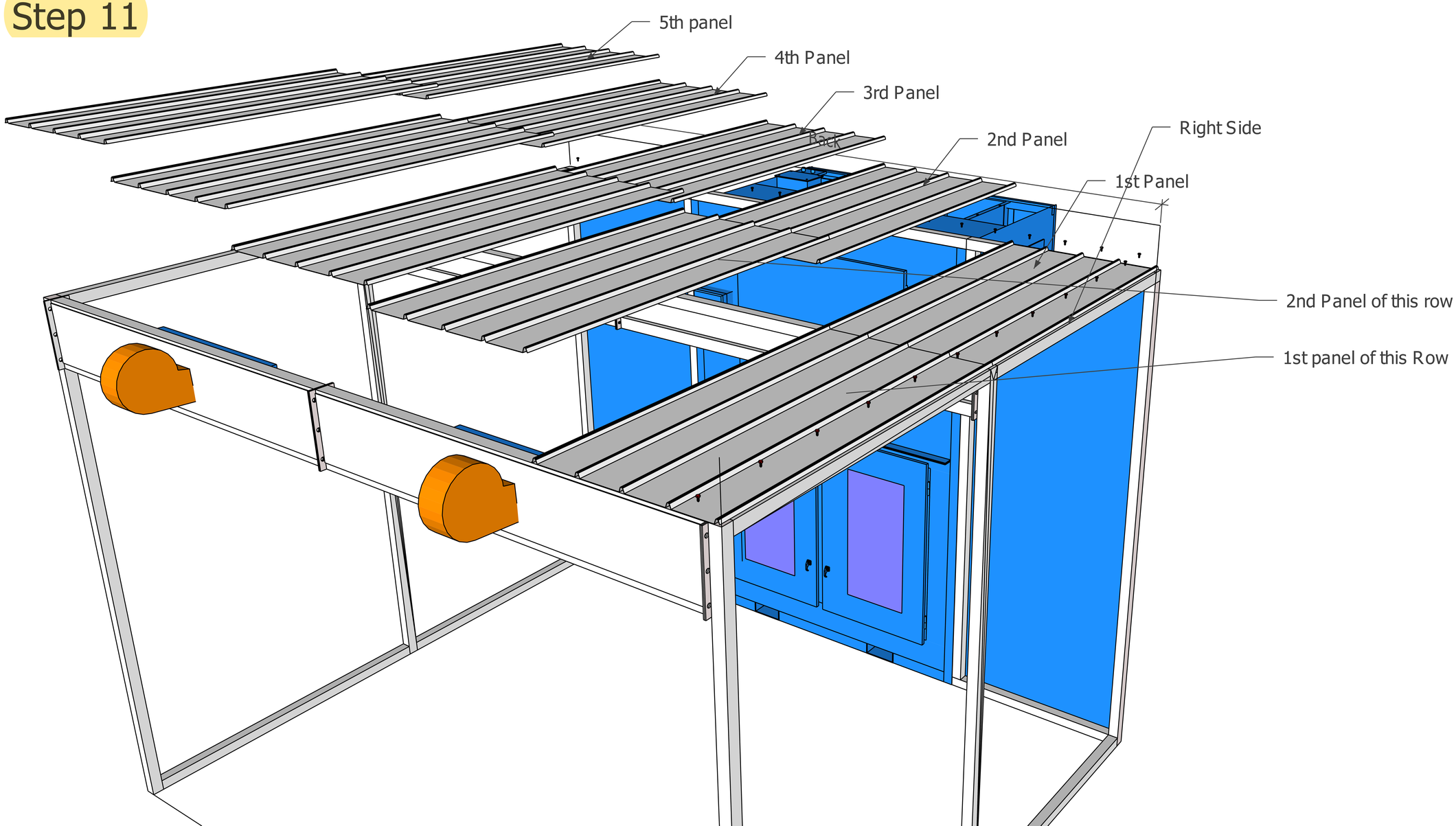
5th panel
4th Panel
3rd Panel
Back
2nd Panel
Right Side
1st Panel
2nd Panel of this row
1st panel of this Row

Step 12

The manufacture has only installed the screws on the back and on the right side. You can shift the frame structure some in order to realign the screw holes in the back and right side. With back and right side screws in place, this will hold the frame square, Now finish screwing the roof panels in place then tighten the screws and bolts on the frame structure. Then do the electricals and the vinyl placement.

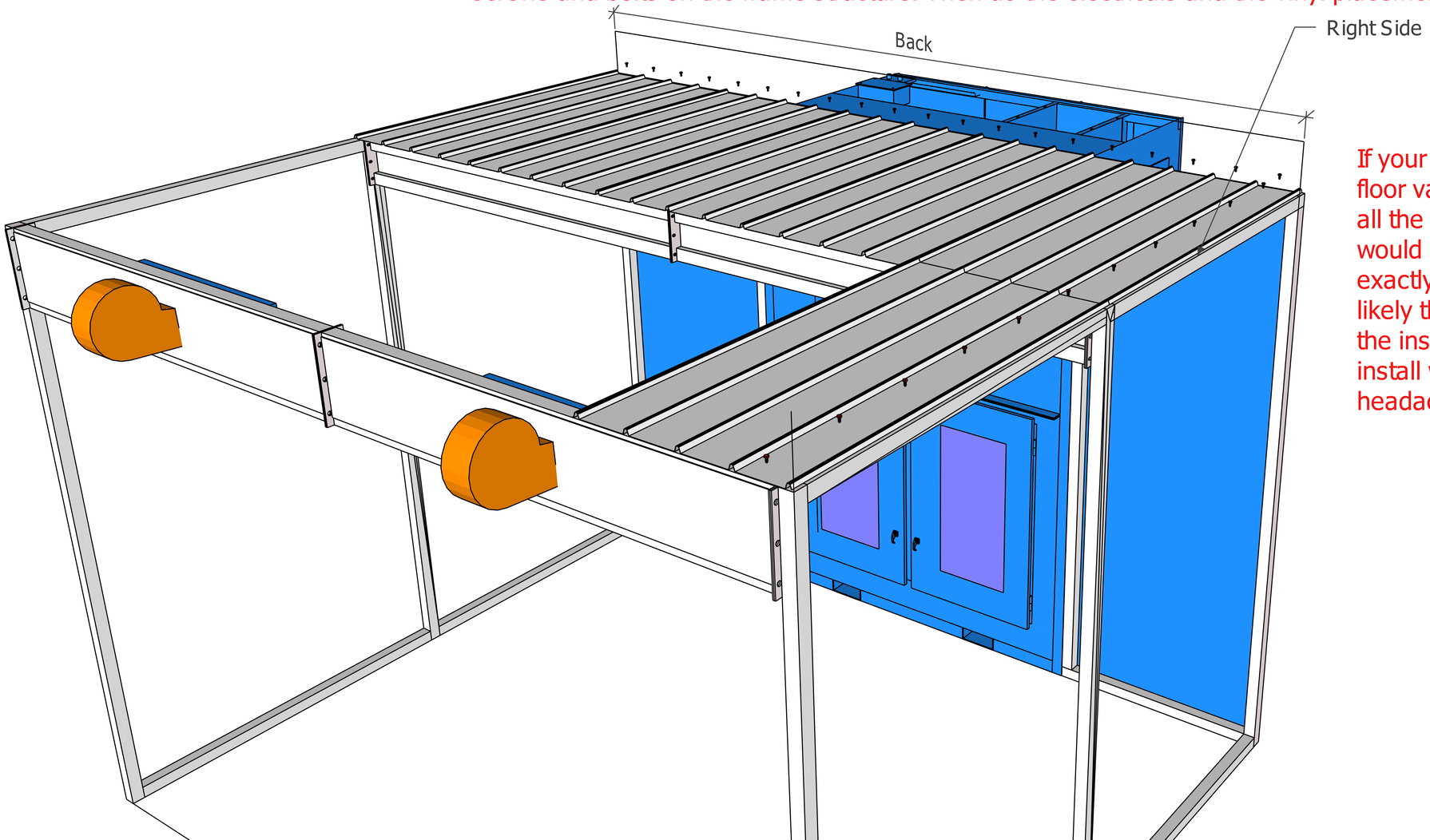

If your floor and the manufactures floor varied in level and they screwd all the top metal down, the installers would have to shim this frame to be exactly the same as theirs. Now most likely the floors will be different and the installers making new holes as they install will prevent a lot of installation headaches.

Electrical component parts

Step 13

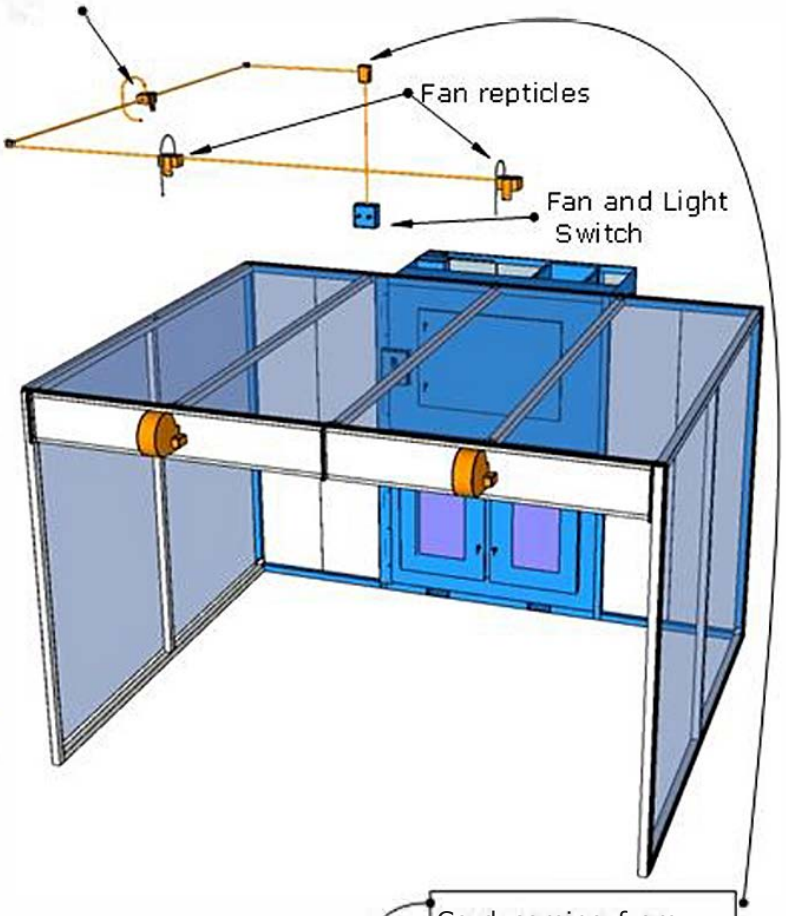

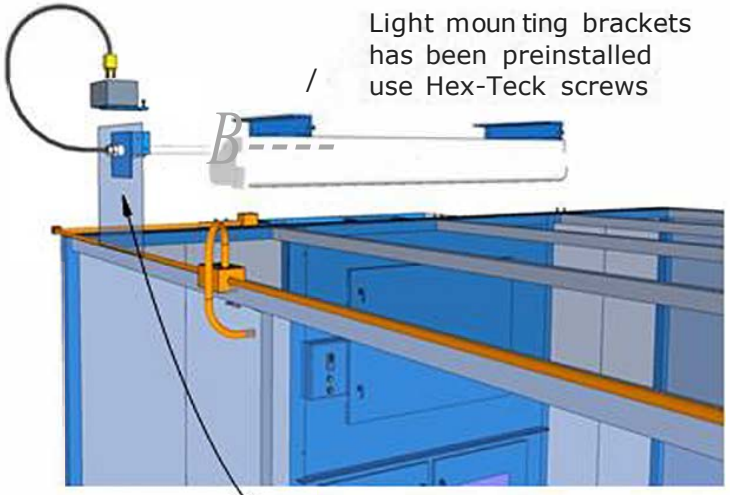

Step 14

A slit will have to be cut big enough for the plug in to go through

Cord coming from this box ties in to box in the top of the machine, Cord grip inside of machine for cord to go through the wall.

Cord for lights and fan connect to the machine here

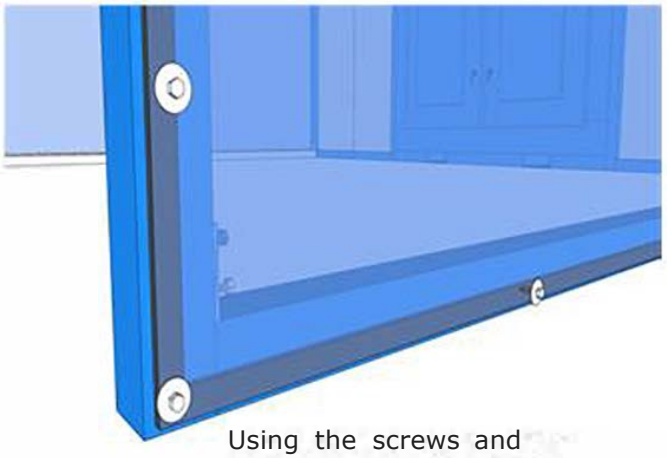

Using the screws and fender washers, Place the screws to secure the vinyl and Velcro together, Temperature changes makes the vinyl shrink and swell, causing Velcro to come loose.
Place screws randomly, about every 16"

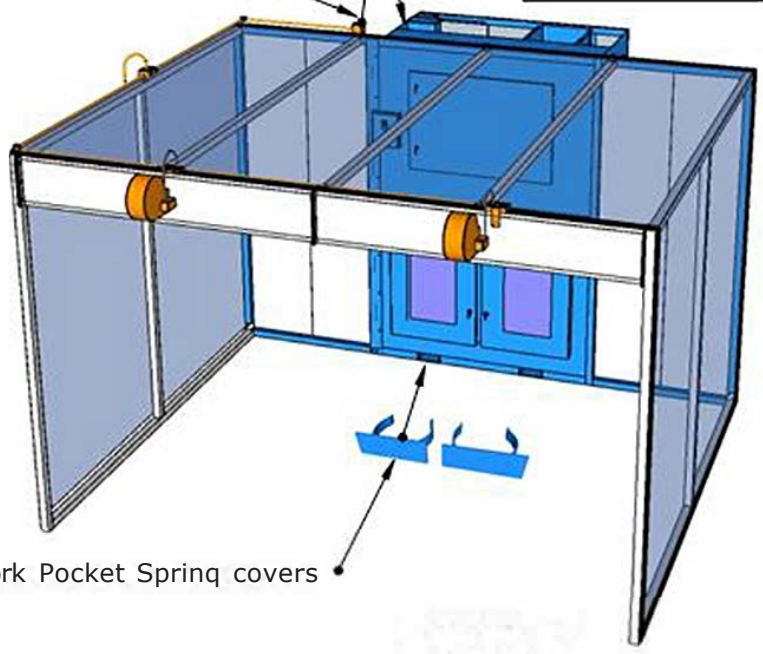

Fork Pocket Spring covers